COMBIPERM are electromagnetically released permanent magnet brakes and clutches for dry operation whose flux is generated by permanent magnets. This effect permits the connection of shafts in voltage free condition or the safe deceleration of masses.

You find possible shaft diameters in the "Bore Table" on page 51.
On request we adapt **COMBIPERM** to your constructional and electrical requirements.

Program Schedule

COMBIPERM quiescent-current operated brakes and clutches			
Holding brake with Emergency-Stop-function	**0.4 . . .145 Nm**	page 17	COMBIPERM **P1**
Clutch quiescent-current operated	**6 . . . 120 Nm**	page 19	COMBIPERM **PC**

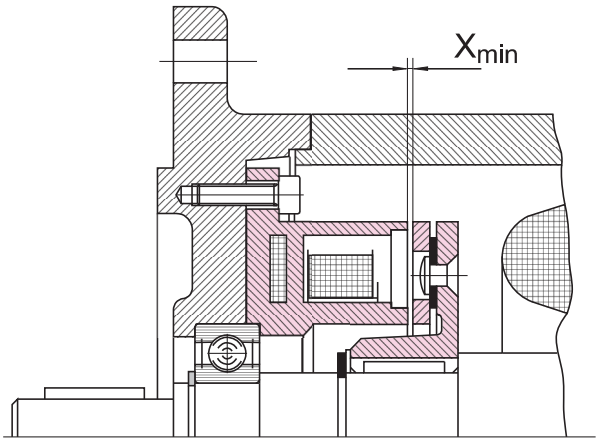

COMBIPERM P1

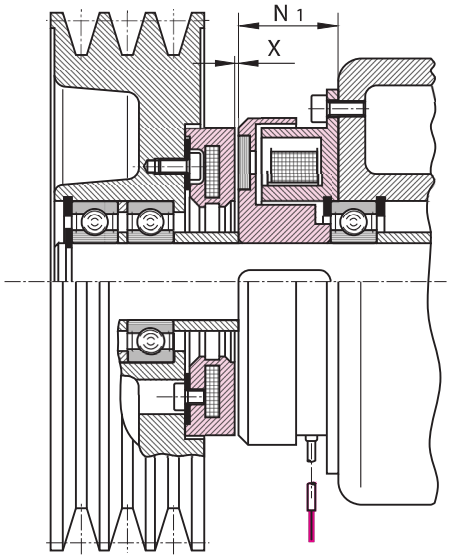

COMBIPERM PC

Technical Data

COMBIPERM **P1** first choice for your servomotor

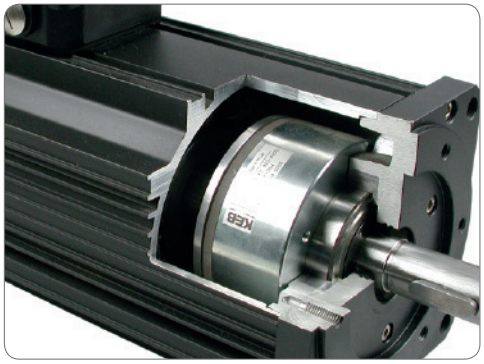

are powerful permanent magnet brakes with frictionally engaged, backlash-free effect. Rare earth magnets create a force field, which is cancelled by the counter-pole magnet coil (opened) in current-supplied condition and in combination with the membrane spring on the armature it ensures a residual torque-free separation independent of the installation position.

COMBIPERM P1 are designed for rated operating voltage 24 V DC according to ISO class F (max. 155 °C) and ensure a safe operation within a wide range of temperatures. On request versions in other operating voltages are available.

- certified to

Range of application: e.g. machine building, medical technology, industrial robots, servo-drives

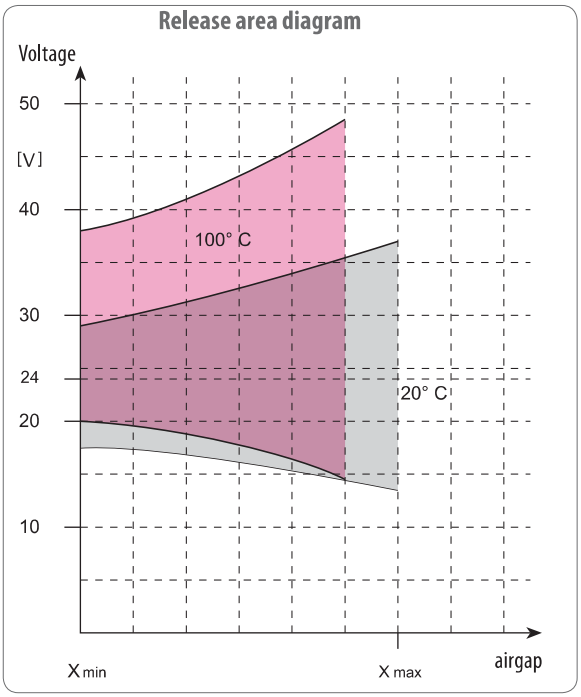

Please bear in mind

- that magnetic materials within the direct surroundings can weaken the torque, reduce maximal air gaps and lead to a shifting of the release range.
- that the rated torques are achieved after a required running-in process (please see instruction manual).
- that the torques become less at higher speeds

Ordering example: COMBIPERM P1

06 P1 130

Size — Type — Design

V DC, Ø d_{30} ?

COMBIPERM
- brake with current -

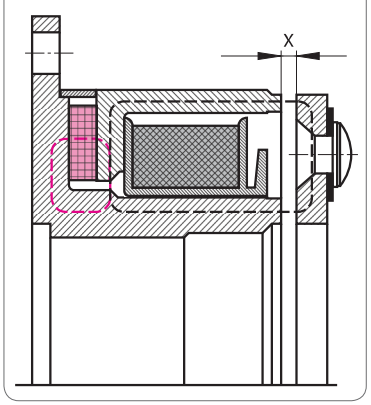

COMBIPERM
- brake without current -

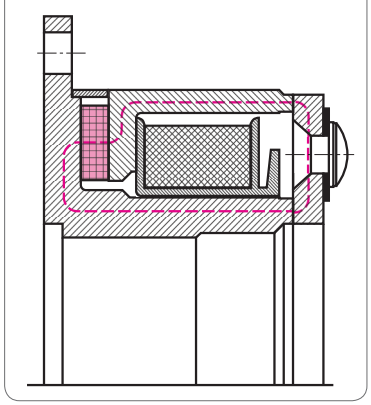

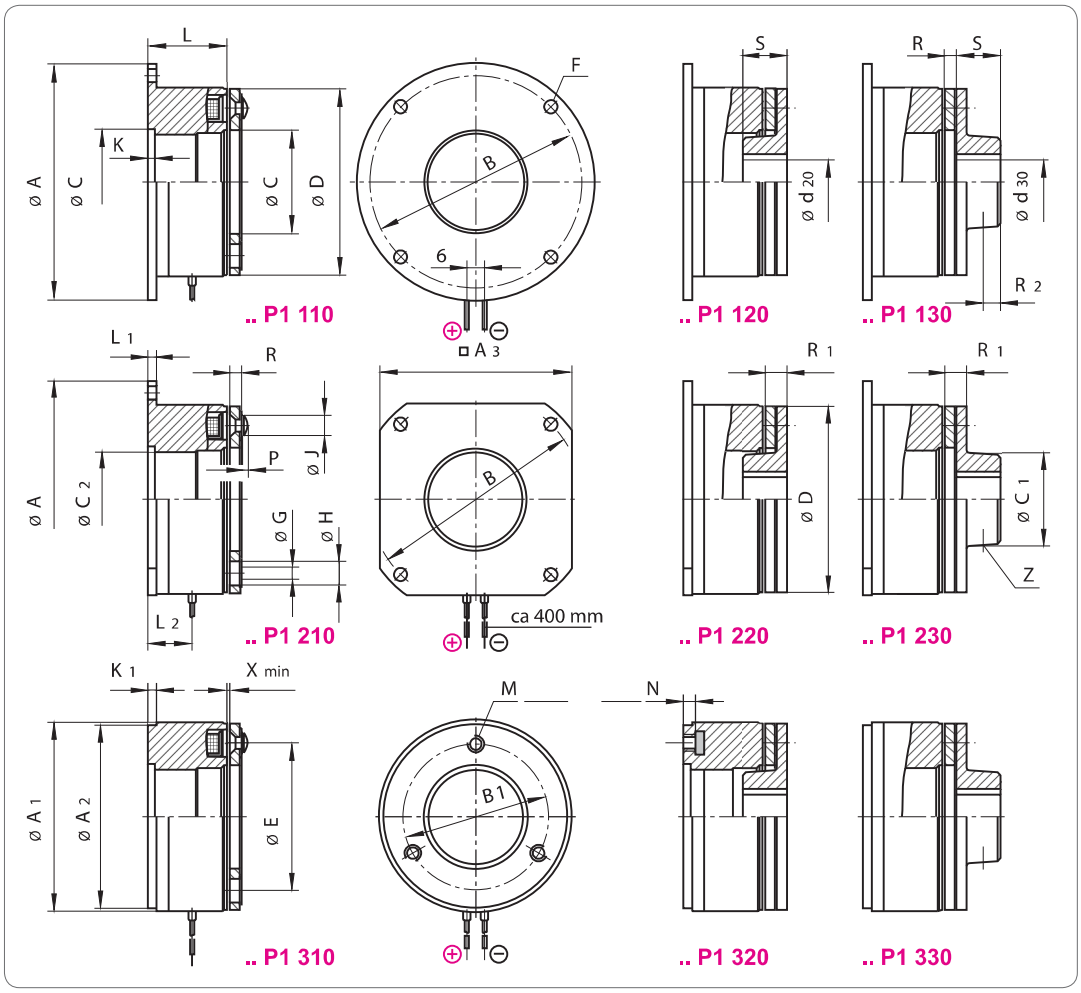

Size	M_{2N} [1] [Nm]	P_{20} [W]	A_{h8}	A_1	$A_{2\,h8}$	A_3	B	B_1	C^{H8}	C_1	C_2	D	E	ØF	G	H	J	K
01	0.4	8	39	28	28	32	33.5	22	11	13.5	-	28	19.5	3.4	2x2.1	5.3	4.5	-
02	1	10	45	32.2	32	34	38	23	12.5	16	-	32	23	3.4	3x2.6	6	5	-
03	2	11	54	41	40	42	47	28.5	19	22	-	40	30	3.4	3x3.1	6	5.5	-
05	4.5	12	65	51.5	50	53	58	40	26	24	24	50	38	3.4	3x3.1	6.5	5.5	2
06	9	18	80	64	63	66	72	49	35	32	32	63	50	4.5	3x4.1	10	8	2
07	18	24	100	80.8	80	83	90	63	42	38	38	80	60	5.5	3x4.1	11	8	2
08	36	26	125	101	100	103	112	78	52	48	48.5	100	76	6.5	3x5.1	11.5	10	2.5
09	72	40	150	126	125	128	137	106	62	57	58	125	95	6.5	3x6.1	15	11.5	3.5
10	145	50	190	161	160	163	175	135	80	71	75	160	120	9	3x8.1	21	14.5	3.5

Size	K_1	L	L_1	L_2	M	N	P	R	R_1	R_2	S	d_{20}^{H7}	d_{30}^{H7}	d_{30}^{H7}	X_{min}	$X_{max}^{20°}$	Z	Weight kg
01	3	19.5	2	10.5	2xM3	3	1	2.25	4.25	2.7	7	6	6	8	0.15	0.3	1xM3	0.1
02	2	21.5	2	10.5	3xM3	3	1.3	2.1	4.1	4	10	8	8	10	0.15	0.3	1xM3	0.1
03	2	22.5	2	12	3xM3	3	1.5	2.6	5.2	5	12	10	12	15	0.15	0.4	1xM4	0.2
05	2	28.5	2	14	3xM3	3	1.5	3	6	5	12	15	15	19	0.2	0.5	1xM5	0.35
06	3	26.8	3	15	3xM4	4	2	3.9	7.4	6	15	18	18	25	0.3	0.65	1xM6	0.55
07	3	29.9	3	16.5	3xM4	5	2	4.5	8.5	8	20	25	25	30	0.3	0.8	1xM6	0.85
08	4	33.9	4	19.5	3xM5	6.2	2.5	6.2	11.2	10	25	30	30	38	0.35	0.9	1xM8	1.6
09	5	37.8	5	23	3xM6	7	3	7.3	13.3	12	30	40	40	50	0.4	1.0	2xM10	2.9
10	6	42.6	6	24	3xM8	9.5	4	9.4	16.4	15	38	50	50	65	0.5	1.2	2xM10	5.4

upon request

All dimensions in mm keyway to DIN 6885/1-P9 standard voltage 24 V DC (release range + 6 % / - 10 %) according to VDE 0580, isolation class "F" hub DIN 6885/1 [1] rated torque after running in process

COMBIPERM

COMBIPERM PC are permanent magnet **clutches**, which transmit in currentless condition frictionally engaged torque. The magnetic circle is optimized by the arrangement of the permanent magnets in the armature, thus permitting the transmission of high torques on small constructional spaces. The opening of the friction-type connection takes place by the antipole connection of the electromagnetic circuit, thereby neutralizing the force action of the permanent magnets

Range of application: e.g. robot technique, medical equipment

Size	M_{2N} [1] [Nm]	P_{20} [W]	Data
06	6	18	
07	12	24	
08	24	28	upon request
09	50	35	
10	120	50	

[1] rated torque after running in process

07PC230-xxxx

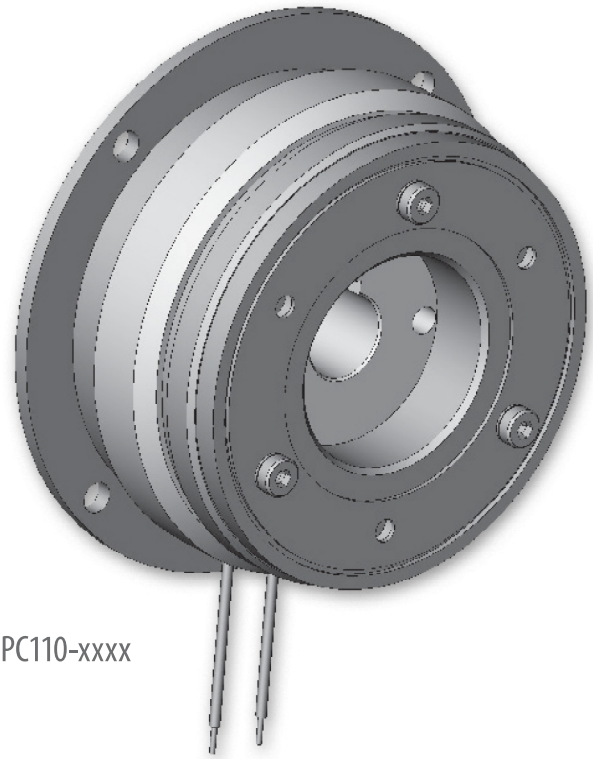

07PC110-xxxx

Permissible friction W_{Rmax} [J]
depending on the switching frequency type P1

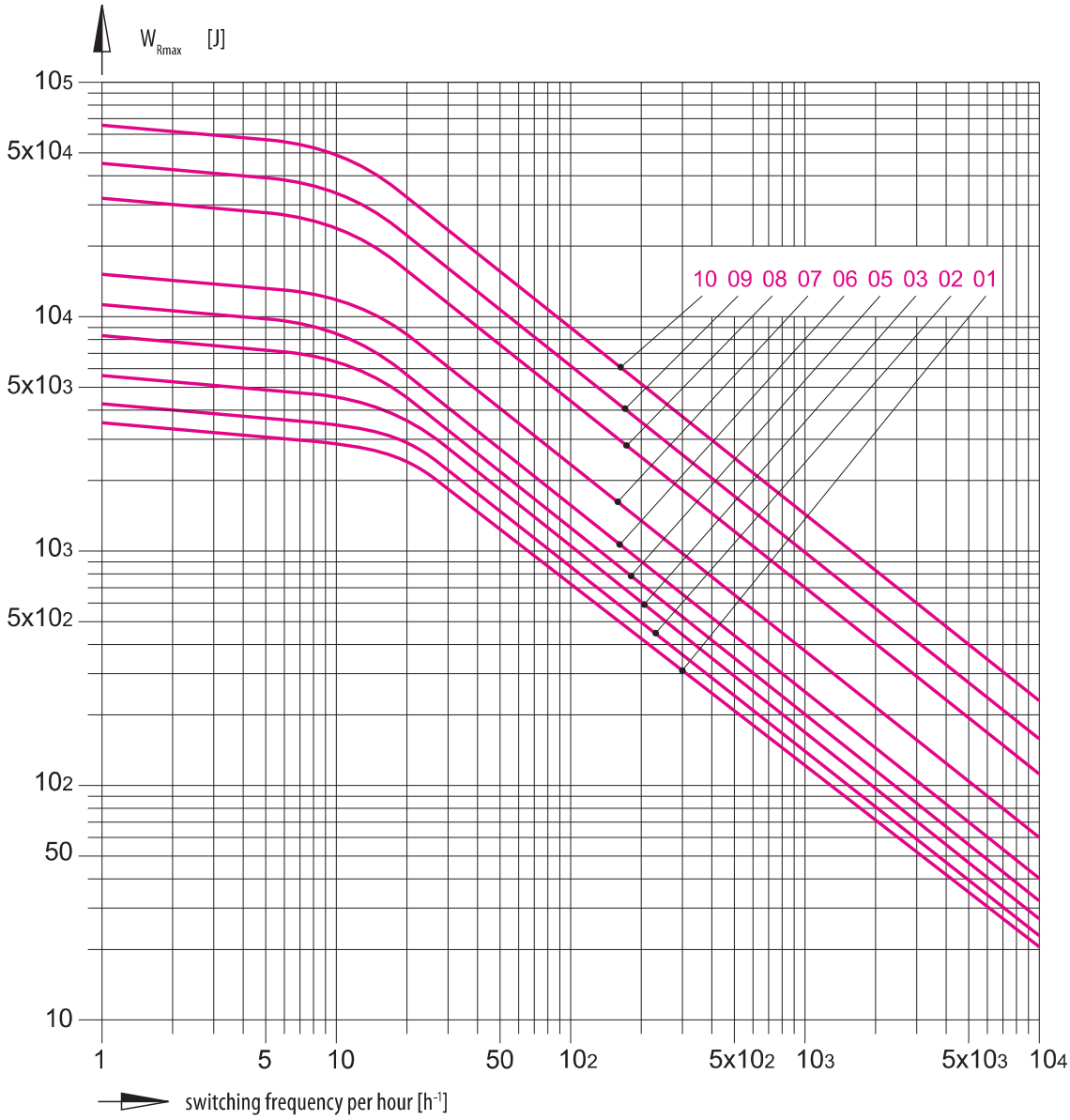

The values for W_{Rmax} apply to a speed 3000 rpm. Dependent on the actual application W_{Rmax} may exceed or fall below these values.

Power Supply

COMBIPERM P1 needs a smoothed DC voltage. To ensure a safe operation in case of large temperature variations, the coil should be supplied with constant current.

Please pay attention to the polarity of the connection leads.
(positive = red, negative = black).

COMBIPERM P1

Size			01	02	03	05	06	07	08	09	10
M_{2N}	20 °C	[Nm]	0.4	1	2	4.5	9	18	36	72	145
$M_{stat.}$	100 °C		0.35	0.8	1.8	4	8	15	32	62	130
$M_{dyn.}$	20 °C	[Nm]	0.3	0.8	1.7	3.8	7.5	15	28	55	110
		[kgm²]	0.001	0.001	0.001	0.001	0.002	0.004	0.012	0.036	0.1
		[rpm]	3,000	3,000	3,000	3,000	2,000	2,000	2,000	2,000	2,000
P_{20}		[W]	8	10	11	12	18	24	26	40	50
J											
Armature	P1.110		0.01	0.014	0.045	0.122	0.37	1.15	4	11.5	39
	P1.120/130		0.013	0.021	0.068	0.18	0.54	1.66	5.56	16	53
$W_{R\,0,1}$		[kJ]	200	300	410	580	890	1290	2900	6200	13000
		[kgm²]	0.001	0.001	0.001	0.001	0.0015	0.004	0.0120	0.036	0.1
		[rpm]	3,000	3,000	3,000	3,000	2,000	2,000	2,000	2,000	2,000
X_{max}	20 °C	[mm]	0.3	0.3	0.4	0.5	0.65	0.8	0.9	1	1.2
X_{min}			0.15	0.15	0.15	0.2	0.3	0.3	0.35	0.4	0.5
n_{max}		[rpm]	10,000	10,000	10,000	10,000	10,000	10,000	10,000	8,000	8,000
Switching times	t_2	[ms]	10	12	25	35	40	50	90	140	190
	t_{11} =		2	2	2	2	2	3	3	7	12
	t_1 =		6	6	6	7	7	10	22	25	65

Legend

M_{2N}	rated torque after running in process (slip speed 20 rpm)	[Nm]
$M_{stat.}$ 100 °C	rated torque at 100 °C (slip speed 20 rpm)	[Nm]
$M_{dyn..}$ 20 °C	switching torque at specified conditions	[Nm]
P_{20}	power at 20 °C	[W]
J	moment of inertia	[kgm²]
n_{max}	max. speed	[min⁻¹]
X_{min}	nominal air gap	[mm]
X_{max}	max. air gap at which the armature attracts	[mm]
$W_{R\,0,1}$	friction work up to 0.1 mm abrasion	[kJ]

t_1	**Engaging time:** Time from disconnecting the current until the rated torque is attained.	[ms]
t_{11}	**Engaging delay time:** Time from disconnecting the current until the torque rises.	[ms]
t_2	**Release time:** Time from connecting the current until the torque decreases.	[ms]

The stated switching times are achieved with adjusted nominal air-gap (x_{min}). These are averages whose dispersion depends on the power supply and coil temperature.